Single Setup Ballbar Testing of 5-Axis Machine Tools to Identify Position-Independent Geometric Errors

Joseph M. Flynn[1*], Parag Vichare[2], Alborz Shokrani[1], Vimal Dhokia[1] and Stephen T. Newman[1]

[1]Department of Mechanical Engineering
University of Bath
Bath, BA2 7AY, UK

[2]School of Engineering
University of the West of Scotland
Paisley, PA1 2BE, Scotland

Abstract

Industry is currently seeking rapid methods to verify the accuracy of five-axis machine tools (5A-MTs) throughout their operational life. The ballbar has previously been reported as a tool used to identify position-independent geometric errors within the rotary axes of 5A-MTs. At present, a minimum of two separate ballbar testing set-ups are necessary to identify eight error sources inherent to two rotary axes. This paper presents a method to identify the same errors with the use of a single ballbar testing set-up. By completely removing the need for operator intervention during or between tests, automation leads to significant reductions in process duration. Error identification is first explained mathematically and later evaluated and proven on a commercial 5A-MT. Finally, compensation of these errors demonstrates significantly improved 5-axis contouring capability.

1. Introduction

All machine tools are subject to error in the relative positioning and orientation of the cutting tool and the workpiece. Thermo-mechanical, load-induced, dynamic and motion-control-related errors notwithstanding, geometric error sources can significantly affect part quality as a result of deviations in the position, shape and alignment of machine tool axes [1]. The increased mechanical complexity of Five-axis machine (5A-MTs) results in a greater number of potential error sources compared to three-axis machines [2]. One of the most widespread 5A-MT configurations exhibits three Cartesian linear axes, and two rotary axes housed within a tilting-rotary table assembly, as shown in Figure 1. The kinematic configuration of this machine may be denoted as Z → Y → X → A → C, from tool-tip to workpiece. In this case, the rotary axes 'A' and 'C' revolve about the X and Z-directions, respectively and this kinematic configuration shall form the focus of this paper.

Due to accuracy limitations in assembly, error avoidance is now heavily supplemented by error identification and compensation. Hence, the development of measurement instrumentation and testing procedures to isolate and measure geometric error sources in 5A-MTs is a fertile research area [1], [2]. Since its conception by Bryan in 1982 [3], the telescoping magnetic ballbar (ballbar) has become an established tool in the identification of geometric, dynamic and motion control errors in three-axis machine tools [4]. However, in 1997, Sakamoto et al. [5] proposed that the repertoire of the ballbar may be extended to include the identification of position-independent geometric error sources (PIGES, hereafter) in rotary axes. Since then, a wide range of research has been undertaken in this area.

This paper aims to build upon existing ballbar testing procedures used in the measurement of PIGES within tilting-rotary tables in three ways: (i) Reducing the number of necessary testing setups to improve testing durations; (ii) Automating the single setup testing procedure to alleviate the need to unnecessary manual intervention with testing equipment during and between tests; (iii) The development of error-identification methods that are independent of machine tool configuration. For each of these points, explanation of the operating principles is provided, followed by a demonstration of effectiveness on a commercial 5A-MT.

* Corresponding author: Tel.: (+44) 1225 386131; E-mail: j.m.flynn@bath.ac.uk

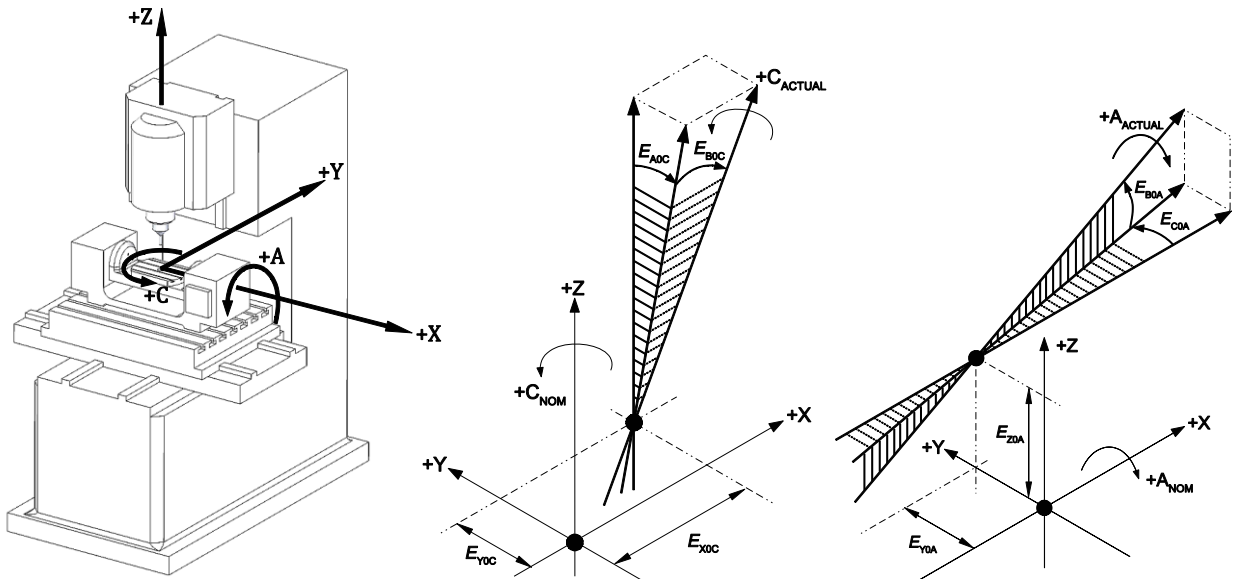

(a) (b) (c)

Figure 1: (a) Example 5-axis machine tool, with tilting-rotary table, and PIGES associated with the C-axis (b) and A-axis (c) [14]

2. BALLBAR TESTING TO IDENTIFY PIGES IN 5-AXIS MACHINE TOOLS

The telescoping magnetic ballbar (ballbar), shown in Figure 2a, utilises a precision linear transducer to detect deviations as the tool-cup undertakes a circular trajectory about the centre-pivot. An example ballbar setup for rotary axis testing is displayed in Figure 2b. In the emergent work of Sakamoto et al. [5], synchronised 3-axis motions (utilising a single rotary axis and two linear axes) were used to create a circular interpolation about the average line of the rotary axis. By maintaining a constant ballbar alignment throughout this motion, deviations from the nominal circular path could be detected and related to rotary-axis geometric errors. Since then, the use of the ballbar in five-axis machine tool applications has drawn significant attention in academic research [6]–[13].

This paper is concerned with the identification of PIGES within the tilting-rotary table of a five-axis machine tool. Termed ‘location’ errors in the ISO 230:1 and ISO 230:7 standards [14], [15], the definitions of these errors are outlined in Table 1 and Figures 1b and 1c. For simplification, it is often assumed that only the PIGES within the rotary axes e.g. [6], [7], [10] effect the extension of the ballbar. The research presented in this paper also operates using these assumptions.

Due to the ballbar’s single degree of freedom (i.e. extension), multiple error source components can combine to change the measured ballbar length. Hence, an enduring research challenge is to design testing toolpaths that help to isolate specific error source effects. This is generally achieved by maintaining a constant ballbar alignment throughout a circular trajectory created by a rotary axis in isolation, or through synchronised rotary and linear axis motion. This strategy has typically taken two forms, namely: aligning the ballbar to a Cartesian reference geometry (e.g. the X-axis) [5], [16], or using a cylindrical coordinate system to align the ballbar axially, radially or tangentially with respect to a rotary axis average line [6], [8]–[10]. A comparison of both approaches has identified the cylindrical coordinate system as a preferred method due to its reduced sensitivity to set-up errors i.e. poor placement of the centre-pivot or misalignment of the tool-cup in the spindle [10]. However, the Cartesian alignment has facilitate the capture of more complex position-dependent error source information, though this beyond the scope of this research.

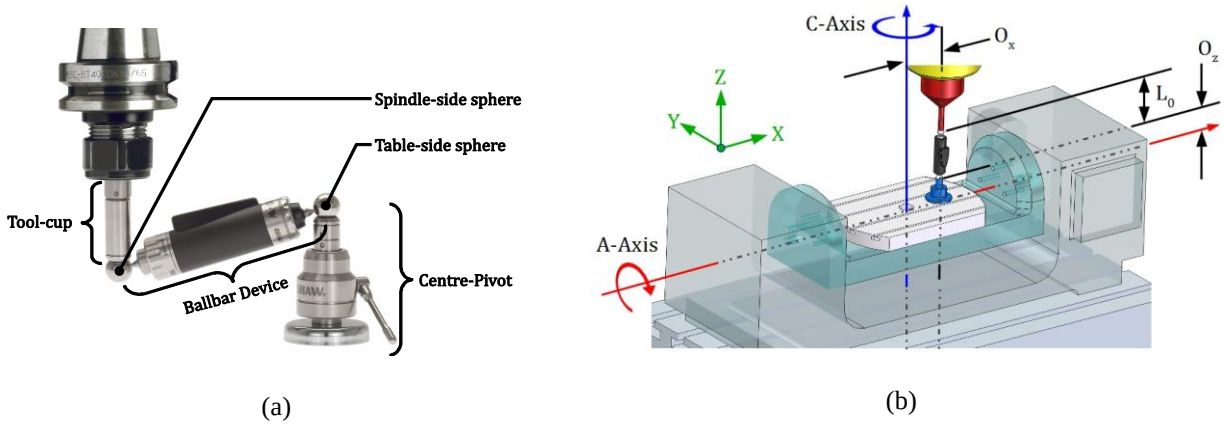

(a) (b)

Figure 2: Examples of (a) QC20 ballbar equipment [4], and (b) typical testing setup descriptors for 5-axis axis testing

The aim of using different ballbar alignments is to isolate and then measure offset errors and tilt errors in a rotary axis average line. In almost all existing research, a radial ballbar alignment is used to identify the centre of rotation, which is analogous to the finding the offset errors of a rotary axis [5]–[8], [10], [11]. In contrast, a number of techniques have been used to identify tilt errors. The first of these is to use an axial ballbar alignment to measure the distance between two circular trajectories; one undertaken by the tool-cup and one traced by the centre-pivot as it rotates about the rotary axis [6], [10]. This test identifies the alignment of the plane of rotation of the rotary axis compared to the nominally parallel plane containing the tool-cup's trajectory. An alternative test requires the radially aligned ballbar test to be undertaken in at least two axially separated locations along the rotary axis average line e.g. [11]. The line passing through each of the identified centres of rotation is then taken as a representation of the rotary axis average line. Another testing method exists in which an oblique ballbar alignment is used in conjunction with the radially test to identify tilt and offset errors [17]. More complex multi-axis toolpaths (4 or more axes), have also been used to identify geometric errors within 5-axis machine tools. The most recognised of these methods emulates a cone-frustum machining test using multi-axis control e.g. [9].

PIGES values may be separated from ballbar measurement data using analytical methods [6], [7], [10]. These methods consider the geometry of the machine tool and use ballbar measurements to identify the position and alignment of rotary axes. In the presence of measurement noise and other un-modelled effects, the least-squares fitting of key geometries (such as sinusoids, circles, ellipses and planes) is used to add robustness to error identification procedures. Alternative error identification methods utilize iterative optimisation algorithms to identify a set of error source values, that when inserted into the kinematic model of the machine tool, best explain the observed ballbar measurements [13]. In addition to tool-path and error extraction development, researchers have designed more complex centre-pivots and tool-cups. For example, [11] introduces a tool-cup with a universal joint, which is used to correct tool-cup misalignment errors. Additionally, [7] use a tool-cup and centre-pivot with 45 degree projections. These projections permit a full 360 degree rotation in either the Y Z or ZX plane during volumetric three-axis ballbar tests; usually limited to partial-arc testing.

Despite numerous research efforts, there is currently limited commercial support for ballbar testing used in the identification of offset and tilt errors within rotary axes. Possible reasons for this include:

i. Until recently, there has been a lack of controller capability to generate simultaneous multi-axis interpolations;

ii. The complexity of the toolpath programming has rendered five-axis ballbar testing an 'expert' process;

iii. Multiple testing set-ups increase testing duration and inhibit automation. Additionally, complex / machine-specific error identification procedures lead to significant operator expertise requirements

For the ballbar to be widely accepted in 5A-MT verification, these points must be addressed. Through the design of a single set-up ballbar testing procedure, the identification of PIGES within tilting-rotary tables may be highly automated, minimising machine down time and removing the need for interim operator intervention. A secondary aim of this research is to use automation and machine-configuration-agnostic error extraction techniques to alleviate the current requirement for operator expertise when analysing 5-axis ballbar test results.

Table 1: 5-axis ballbar test setup parameters, A-axis location errors and C-axis location errors

Setup Parameters		A-Axis Error Parameters		C-axis Error Parameters	
L_0	Nominal (calibrated) ballbar length	E_{Y0A}	Error in position of A-axis in Y-axis direction	E_{X0C}	Error in position of C-axis in X-axis direction
O_x	Perpendicular offset of the centre-pivot from the C-axis, in the X-axis direction	E_{Z0A}	Error in position of A-axis in Z-axis direction	E_{Y0C}	Error in position of C-axis in X-axis direction
O_z	Perpendicular offset of the centre-pivot from the A-axis, in the Z-axis direction	E_{B0A}	Error of orientation of A-axis in the B-axis direction; squareness of A to Z	E_{A0C}	Error of orientation of C-axis in the A-axis direction
		E_{C0A}	Error of orientation of A-axis in the C-axis direction; squareness of A to Y	E_{B0C}	Error of orientation of C-axis in the C-axis direction

3. Proposed Measurement Method

As with existing methods, the testing procedure outlined in this research uses simultaneous three-axis interpolations to run ballbar tests in the axial and radial alignments for each rotary axis. However, unlike existing methods, this is achieved this using the single off-axis set-up illustrated in Figure 2b.

3.1. Testing Setup

The single testing set-up used throughout this paper may be characterised by the three parameters in Figure 2b, which are listed in Table 1. The spindle is driven to the desired centre-pivot location and the centre-pivot is positioned manually. This position is clamped and then set as the origin of the work-piece coordinate system using an available work offset. The location of the centre-pivot is then verified using three planar volumetric ballbar tests in the XY, Y Z and ZX-planes; originally proposed and described in [10]. The ballbar length measurements are used to describe three lines across the surface of a sphere, with the centre-pivot's location at its centre. By transforming the ballbar lengths into X,Y and Z coordinates of the tool-tip, a least squares sphere is fitted to identify the centre coordinates. This fitting is achieved using the method outlined in [18].

3.2. Radial Ballbar Tests – Locating the Centre of Rotation

The coordinates of the centre of rotation are identified in the two nominally perpendicular directions to the rotary axis average line. In the case of an A-axis (revolving about X), the Y and Z coordinates of the centre of rotation are found. If the rotary axis also has tilt errors, the centre of rotation will vary depending on the position of the centre-pivot on the table. It is proposed that this is permissible when only locations errors are present, as the combination of the centre of rotation, and the alignment of the rotary axis average line is sufficient to characterise the rotary axis for all positions. The toolpaths for the radial A-axis test and radial C-axis tests are shown in Figures 3a and 3b, respectively. The tool-cup location, $[x_{TC}, y_{TC}, z_{TC}]^T$, is calculated for a given rotary axis angle using the transformation in Equation 1, rotating a point $[x, y, z]^T$, about a line passing through $[a, b, c]^T$, with direction unit vector $[u, v, w]^T$, through angle θ:

$$\begin{bmatrix} x_{TC} \\ y_{TC} \\ z_{TC} \end{bmatrix} = \begin{bmatrix} \left(a\left(v^2+w^2\right)-u\left(bv+cw-ux-vy-wz\right)\right)\left(1-\cos\theta\right)+x\cos\theta+\left(-cv+bw-wy+vz\right)\sin\theta \\ \left(b\left(u^2+w^2\right)-v\left(au+cw-ux-vy-wz\right)\right)\left(1-\cos\theta\right)+y\cos\theta+\left(cu+aw-wx+uz\right)\sin\theta \\ \left(c\left(u^2+v^2\right)-w\left(au+bv-ux-vy-wz\right)\right)\left(1-\cos\theta\right)+z\cos\theta+\left(-bu+av-vx+uy\right)\sin\theta \end{bmatrix} \quad (1)$$

As the centre-pivot's starting position is also the origin of the workpiece coordinate system, and the orientation of the rotary axis is yet to be identified, the following values are inserted into Equation 1:

Radial A-Axis Equation Parameters			Radial C-Axis Equation Parameters		
$x = 0$	$a = 0$	$u = 1$	$x = \pm L_0$	$a = -O_x$	$u = 0$
$y = 0$	$b = 0$	$v = 0$	$y = 0$	$b = 0$	$v = 0$
$z = L_0$	$c = -O_z$	$w = 0$	$z = 0$	$c = 0$	$w = 1$

The '±' indicates whether the tool-cup rotates in a concentric circular path that has a larger or smaller radius than the path followed by the centre-pivot. In the event of perfect centre-pivot placement and a rotary axis that has no offset or tilt errors, the ideal centre-pivot location, x_{CP}, may be similarly computed using Equation 1. However, for the Radial A-axis test, 'z' is changed from L_0 to zero, and in the Radial C-axis 'x' is changed from L_0 to zero. With the ideal tool-cup and centre-pivot positions calculated, a ballbar direction unit vector, u_{BB}, is generated for the ith rotary axis angle, θ_i. The '±' indicates whether the tool-cup rotates in a concentric circular path that has a larger or smaller radius than the path followed by the centre-pivot. With the ideal tool-cup and centre-pivot positions calculated, a ballbar direction unit vector, u_{BB}, is generated for the ith rotary axis angle, θ_i.

$$u_{BB}(i) = \frac{\begin{bmatrix} x_{CP}(i) & y_{CP}(i) & z_{CP}(i) \end{bmatrix}^T - \begin{bmatrix} x_{TC}(i) & y_{TC}(i) & z_{TC}(i) \end{bmatrix}^T}{\left| \begin{bmatrix} x_{CP}(i) & y_{CP}(i) & z_{CP}(i) \end{bmatrix}^T - \begin{bmatrix} x_{TC}(i) & y_{TC}(i) & z_{TC}(i) \end{bmatrix}^T \right|} \tag{2}$$

When tilt and offset errors are minute, the 'true' centre-pivot location may be approximated by extending away from the tool-cup position, along the ballbar direction unit vector, by the measured ballbar length. Due to the radial alignment of the ballbar throughout the motion, the effects of tilt errors and synchronization errors between the linear and rotary axes are approximately perpendicular to the ballbar's axis of extension. Hence, their effect on the measured ballbar length is negligible. With this in mind, the problem of identifying the centre of rotation simplifies to two dimensions. As such, a least squares circle may be fitted to the Y and Z-coordinates of the centre-pivot location. The centre-coordinates of this circle are then taken as the location of the centre of rotation. In the research presented in this paper, the least squares circle is fitted using the 'Hyper-Fit' algebraic least squares circle fitting algorithm described by Al-Sharadqah et al. [19]. Once identified, this centre of rotation may be transported back to the point of nominal intersection of the A and C-axes. This is achieved using the orientation of the rotary axis average and is discussed in the next section.

3.3. Axial Ballbar Tests – Identifying the Orientation of the Plane of Rotation

To identify the orientation of the plane of rotation, the axial ballbar alignment is used for each rotary axis, as shown in Figure 4a and 4b. These tests measure the distance from a known plane (traversed by the tool-cup) to the plane containing the centre-pivot motion. As the rotary axis is exercised through its working range, the relative orientation between these two planes becomes clear from the ballbar length measurements. The tool-cup and centre pivot positions are, again, calculated using Equation 1. The centre pivot uses the same parameters as the radial tests due to the fact that the centre-pivot has not moved. The tool-cup locations are calculated for the axial tests using the following parameters:

Axial A-Axis Equation Parameters			Axial C-Axis Equation Parameters		
$x = -L_0$	$a = 0$	$u = 1$	$x = 0$	$a = -O_x$	$u = 0$
$y = 0$	$b = 0$	$v = 0$	$y = 0$	$b = 0$	$v = 0$
$z = 0$	$c = -O_z$	$w = 0$	$z = L_0$	$c = 0$	$w = 1$

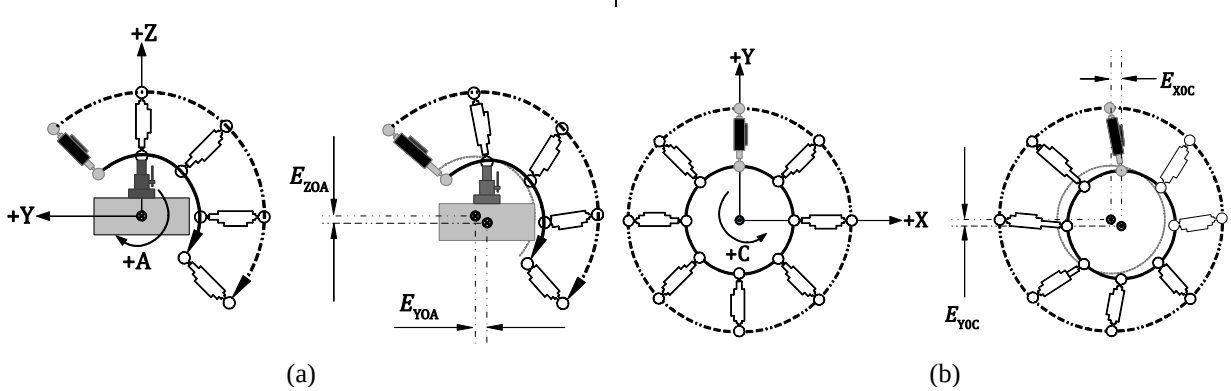

Figure 3: (a) Radial A-axis toolpath shown for an ideal and an offset A-axis, and (b) Radial C-axis toolpath for and ideal and offset C-axis

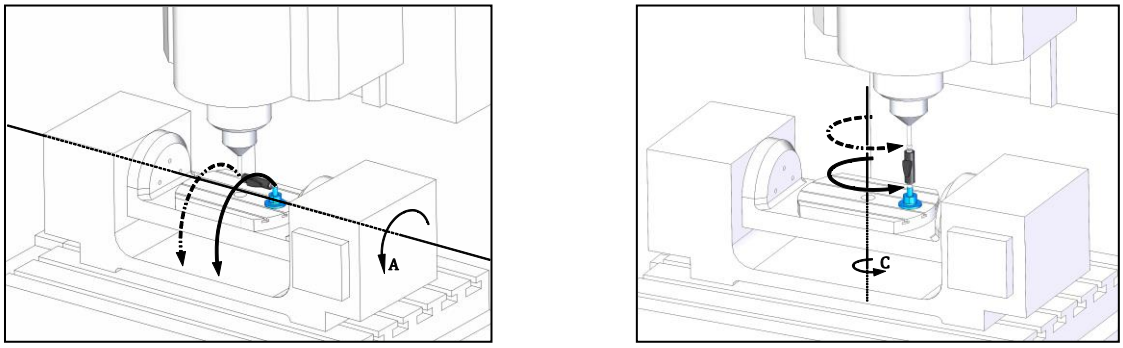

(a) (b)

Figure 4: Axial ballbar alignment tests for the (a) A-axis and (b) C-axis

As with the radial tests, a ballbar direction unit vector is generated using Equation 2. Considering the axial alignment of the ballbar, radial offset errors are now perpendicular to the ballbar's axis of extension. Hence, the measured length is predominantly affected by error sources acting in the axial direction. Assuming minute tilt angles, small angle approximations may be used to state that the tilt error moves the centre-pivot almost exclusively in the axial direction. This assumption is valid if the perpendicular separation of the centre-pivot and rotary axis average line is significantly larger than the expected error motion of the centre-pivot caused by axis tilt. In the axial tests, radial coordinates of the centre-pivot remain unchanged, but the 'true' axial coordinates are updated as follows:

A-axis: $x(i) = x_{CP}(i) + L_{meas}(i)u_{BB}(i)$, **C-axis**: $z(i) = z_{CP}(i) + L_{meas}(i)u_{BB}(i)$

Having established the 'true' centre-pivot positions throughout the axial toolpath motion, a least squares plane of best fit may be fitted to the three-dimensional coordinate data. Assuming the set-up has remained rigid throughout the test, this plane is, by definition, parallel to the plane of rotation of the rotary axis. The plane of best fit is defined as passing through the centroid of the three-dimensional coordinate data of the centre-pivot locations. For 'm' measured centre-pivot locations, the centroid is identified as the mean X, Y and Z positions of these points, namely: $\bar{x}$, $\bar{y}$ and $\bar{z}$. The centre-pivot locations are then centred about this centroid, and stored in a $m \times 3$ matrix $\mathbf{A}$.

$$\mathbf{A} = \begin{bmatrix} x_1 - \bar{x} & y_1 - \bar{y} & z_1 - \bar{z} \\ \vdots & \vdots & \vdots \\ x_m - \bar{x} & y_m - \bar{y} & z_m - \bar{z} \end{bmatrix} = \mathbf{USV}^T \tag{3}$$

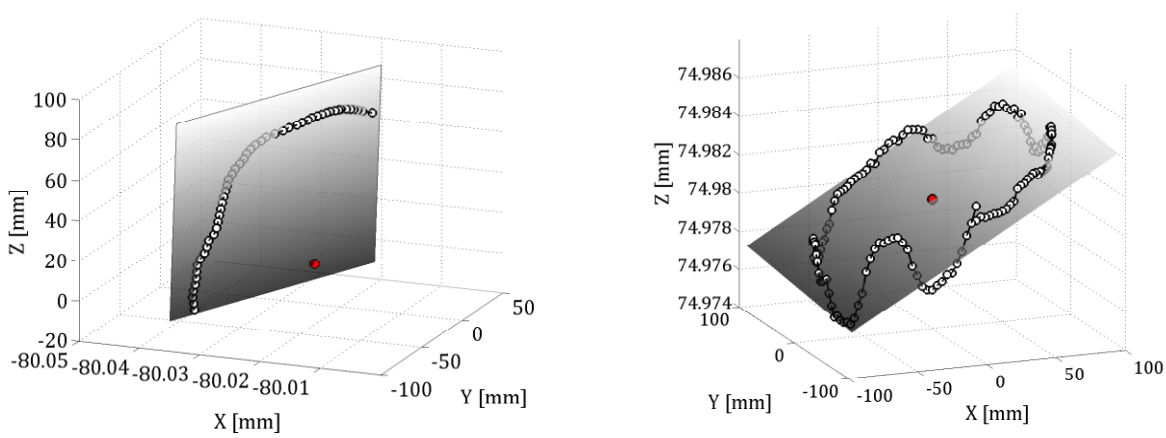

(a) (b)

Figure 5: Examples of least squares plane fits to (a) Axial A-axis test data, and (b) Axial C-axis test data

Where $\mathbf{U}$ and $\mathbf{V}$ are orthogonal matrices, and $\mathbf{S}$ is a diagonal matrix containing the singular values. The columns of $\mathbf{V}$ are the orthonormal basis of the data. The column of $\mathbf{V}$ that corresponds to the column of the smallest singular value in $\mathbf{S}$ yields the unit vector of the least squares plane of best fit via a minimization of the orthogonal distance of the points to the plane. This unit vector and the centroid of the data are sufficient to characterize a plane that is parallel to the plane of rotation, as shown in Figure 5. Any plane may be characterised by Equation 4, which states that a plane with normal unit vector, $\mathbf{n}$, anchored to point, $\mathbf{x_0}$, and with x,y and z coordinates, $\mathbf{x}$, is equal to zero. Hence, the centroid and unit vector from the axial test are used to complete this charaterisation. The previously identified centre of rotation from the corresponding radial test may be used with this plane equation to find the point of intersection between the rotary axis average line and the identified plane. With the normal unit vector of the plane of rotation and the coordinates of the point of intersection between the rotary axis average line and the plane of rotation, the errors identified in the offset position may be transported to the point of nominal intersection between the axes A and C. This leads to the identification of error source values in accordance with the definitions listed in Table 1 and Figure 1.

$$\mathbf{n} \cdot (\mathbf{x} - \mathbf{x_0}) = 0 \tag{4}$$

3.4. Automating the Measurement Process

Throughout each of the four ballbar tests, the centre-pivot's position remains unchanged, allowing automation of the entire measurement process. During the testing tool-paths, the axes are controlled using the tool centre-point management (TCPM) functionality, making for concise NC programming. To transition from the end of one test, to the start of another, TCPM is deactivated and a planar circular interpolation is used to maintain a fixed radius throughout the path to permit the ballbar to remain in situ. The operator is simply required to select the next program to run in the accompanying ballbar software. It was found that time savings of at least 40% could be made using the single-setup procedure, compared with the established two setup e.g. the method presented in [6].

4. VERIFICATION THROUGH EXPERIMENTATION

To verify the efficacy of the proposed method, a HURCO VM10Ui machine tool was used. In these experiments, the machine tool was measured using the proposed method, the NC program was manipulated to compensate the tool-tip position, and the measurements were repeated. The results of repeating the testing procedure with compensated toolpaths are presented in Table 2. In six errors, the error values have undergone a reduction of 85 – 99%. This marks a significant improvement, demonstrating the value of the proposed method. In the case of error E_{Z0A}, a reduction of 47% has been achieved, which is still a marked improvement. Residual errors may be a result of an incorrectly measured tool-length, or residual error in the identification of the centre-pivot's starting position. It is also highly likely that the linear axes of the machine tool did not conform to the assumption of near-nominal kinematic performance, which will have altered the results. The value E_{A0C} has increased by 183%; it was initially very small and has been over-compensated such that its new value is of similar magnitude to the other error sources.

5. CONCLUSIONS

This paper has presented a new single set-up ballbar test for use in the identification of position-independent geometric error sources within a tilting-rotary table of a five-axis machine tool. It has been shown that a single set-up is sufficient to measure four offset and four tilt errors, and that compensation of the machine tool using these values can improve five-axis contouring accuracy by reducing error sources by up to 99%. Furthermore, time savings of at least 40% could be made compared with existing two setup methods. These findings provide significant motivation for further development and evaluation of the single-setup method as a rapid machine tool verification technique. Further work shall assess the uncertainty of measurements taken using the single set-up method.

Table 2: Pre and post-compensation error source values generated using the proposed single set-up method

Error	Uncomp.	Comp.	% Inc.	Error	Uncomp.	Comp.	% Inc.	Units
E_{Y0A}	0.0726	0.0100	-86.226	E_{X0C}	0.0283	-0.0019	-93.286	[mm]
E_{Z0A}	-0.0202	-0.0107	-47.030	E_{Y0C}	0.1041	-0.0023	-97.791	[mm]
E_{B0A}	1.1284 E-5	4.4256 E-7	-99.608	E_{A0C}	5.1954E-6	-1.4715 E-5	(183.231)	[rad.]
E_{C0A}	-1.13006 E-4	1.6461 E-6	-98.734	E_{B0C}	-4.1544 E-5	1.3511 E-5	-67.478	[rad.]

ACKNOWLEDGEMENTS

The authors are pleased to thank the Engineering and Physical Science Research Council (EPSRC No. EP/K504245/1) and our industrial partner for their support during this research.

REFERENCES

[1] *H. Schwenke, W. Knapp, H. Haitjema, A. Weckenmann, R. Schmitt, and F. Delbressine, "Geometric error measurement and compensation of machines—An update," CIRP Ann. - Manuf. Technol., vol. 57, no. 2, pp. 660–675, Jan. 2008.*

[2] *S. Ibaraki and W. Knapp, "Indirect Measurement of Volumetric Accuracy for Three-Axis and Five-Axis Machine Tools : A Review," Int. J. Autom. Technol., vol. 6, no. 2, pp. 110–124, 2012.*

[3] *J. B. Bryan, "A simple method for testing measuring machines and machine tools," Precis. Eng., vol. 4, no. 2, pp. 61–69, 1982.*

[4] *Renishaw, "Renishaw QC20-W ballbar; new wireless product with volumetric testing capabilityTitle," www.renishaw.com, 2013. [Online]. Available: http://www.renishaw.com/ [Accessed: 20-Sep-2013].*

[5] *S. Sakamoto, I. Inasaki, H. Tsukamoto, and T. Ichikizaki, "Identification of alignment errors in five-axis machining centers using telescoping ballbar," Trans. Japan Soc. Mech. Eng., vol. 63, no. 605, pp. 262–267, 1997.*

[6] *M. Tsutsumi and a. Saito, "Identification and compensation of systematic deviations particular to 5-axis machining centers," Int. J. Mach. Tools Manuf., vol. 43, no. 8, pp. 771–780, Jun. 2003.*

[7] *S. Ibaraki, Y. Kakino, T. Akai, N. Takayama, I. Yamaji, and K. Ogawa, "Identification of Motion Error Sources on Five-axis Machine Tools by Ball-bar Measurements (1st Report) – Classification ofMotion Error Components and Development of the Modified Ball Bar Device (DBB5) –," Jounal Japan Soc. Precis. Eng., vol. 76, no. 3, pp. 333–337, 2010.*

[8] *S. H. H. Zargarbashi and J. R. R. Mayer, "Assessment of machine tool trunnion axis motion error, using magnetic double ball bar," Int. J. Mach. Tools Manuf., vol. 46, no. 14, pp. 1823–1834, Nov. 2006.*

[9] *M. S. Uddin, S. Ibaraki, A. Matsubara, and T. Matsushita, "Prediction and compensation of machining geometric errors of five-axis machining centers with kinematic errors," Precis. Eng., vol. 33, no. 2, pp. 194–201, Apr. 2009.*

[10] *M. Tsutsumi, S. Tone, N. Kato, and R. Sato, "Enhancement of geometric accuracy of five-axis machining centers based on identification and compensation of geometric deviations," Int. J. Mach. Tools Manuf., vol. 68, pp. 11–20, May 2013.*

[11] *K.-I. Lee and S.-H. Yang, "Measurement and verification of position-independent geometric errors of a five-axis machine tool using a double ball-bar," Int. J. Mach. Tools Manuf., vol. 70, pp. 45–52, Jul. 2013.*

[12] *M. Tsutsumi and A. Saito, "Identification of angular and positional deviations inherent to 5-axis machining centers with a tilting-rotary table by simultaneous four-axis control movements," Int. J. Mach. Tools Manuf., vol. 44, no. 12–13, pp. 1333–1342, Oct. 2004.*

[13] *Y. Abbaszadeh-Mir, J. R. R. Mayer, G. Cloutier, and C. Fortin, "Theory and simulation for the identification of the link geometric errors for a five- axis machine tool using a telescoping magnetic ball-bar," Int. J. Prod. Res., vol. 40, no. 18, pp. 4781–4797, 2002.*

[14] *"ISO 230-1:2012: Test code for machine tools -- Part 1: Geometric accuracy of machines operating under no-load or quasi-static conditions." International Organization for Standardization, Geneva, Switzerland.*

[15] *"ISO 230-7:2006: Test code for machine tools -- Part 7: Geometric accuracy of axes of rotation." International Organization for Standardization, Geneva, Switzerland.*

[16] *"ISO 10791-6:2014: Test conditions for machining centres -- Part 6: Accuracy of sppeds and interpolations." International Organization for Standardization, Geneva, Switzerland.*

[17] *X. Jiang and R. J. Cripps, "A method of testing position independent geometric errors in rotary axes of a five-axis machine tool using a double ball bar," Int. J. Mach. Tools Manuf., vol. 89, pp. 151–158, Feb. 2015.*

[18] *"Least Squares Geometric Elements Library," (NPL), The National Physical Laboratory, Distributed via EUROMETROS, 2004. [Online]. Available: http://www.eurometros.org/gen_report.php?category=distributions&pkey=14&subform=yes.*

[19] *A. Al-Sharadqah and N. Chernov, "Error analysis for circle fitting algorithms," Electron. J. Stat., vol. 3, pp. 886–911, 2009.*